TABLE OF CONTENTS

1 GENERAL INFORMATION
1.1 How to Use This Manual
1.2 Schematic Symbols
1.3 Abbreviations

2 ELECTRICAL SCHEMATIC
2.1 Power Supply
2.2 Starting System
2.3 Engine Control System
2.4 Machine Control System
2.5 Monitor System
2.6 Sensor & Actuator
2.7 Cab System
2.8 Lighting System

3 HYDRAULIC SCHEMATIC
3.1 Hydraulic System Overview
3.2 Main Hydraulic Circuit
3.3 Swing Circuit
3.4 Travel Circuit
3.5 Pilot Control Circuit
3.6 Attachment Circuit

4 COMPONENT LOCATION
4.1 Electrical Components
4.2 Hydraulic Components

5 CONNECTOR INFORMATION

6 TROUBLESHOOTING
6.1 Electrical System
6.2 Hydraulic System

7 APPENDIX
7.1 Wire Color Codes
7.2 Conversion Table

3.2 MAIN HYDRAULIC CIRCUIT

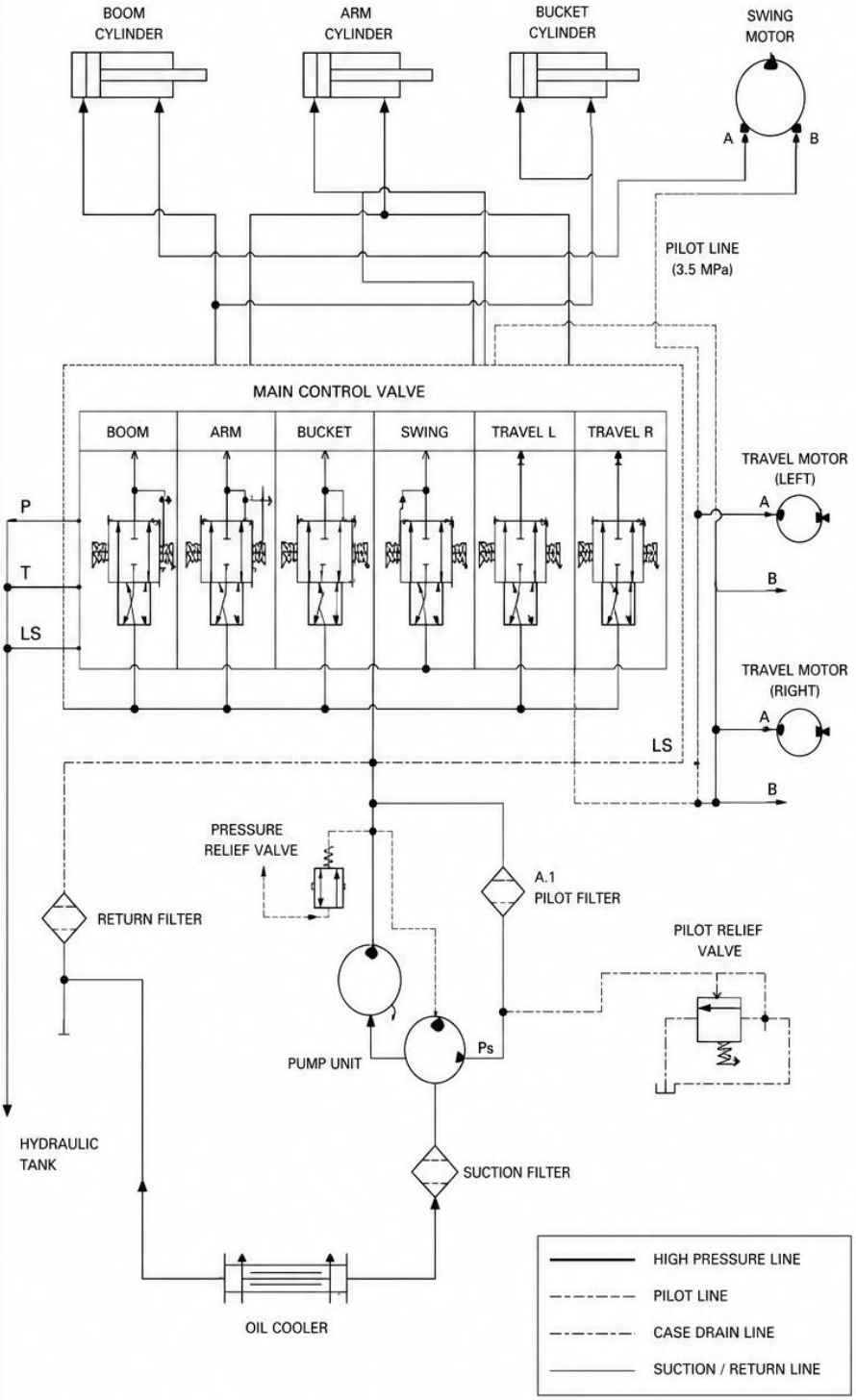

VOLVO CONSTRUCTION EQUIPMENT
PUB. NO. VOE14500239
REV. D MAY 2024

SCHEMATIC IS SUBJECT TO CHANGE WITHOUT NOTICE.

VOLVO VB40 SCREED ELECTRICAL & HYDRAULIC SCHEMATIC MANUAL

The VOLVO VB40 Screed Electrical & Hydraulic Schematic PDF Manual is a detailed technical reference designed for service technicians, electricians, and hydraulic specialists working on the VB40 asphalt paving screed. This manual provides complete electrical wiring diagrams, hydraulic circuit schematics, system layouts, connector pin details, and component identification information. It is intended to support accurate troubleshooting, fault diagnosis, and efficient repair of both electrical and hydraulic systems. With OEM-standard schematic illustrations and clear technical data, this manual helps users trace circuits, understand system operations, identify faults quickly, and perform precise maintenance. It is an essential resource for reducing downtime and ensuring reliable screed performance in demanding road construction environments.

VOLVO VB40 Screed Electrical & Hydraulic Schematic PDF Manual, VOLVO VB40 Wiring

Diagram Manual, VOLVO VB40 Hydraulic Schematic Manual, VOLVO VB40 Electrical Circuit Diagram PDF, VOLVO Asphalt Screed Electrical System Manual, VOLVO VB40 Hydraulic Circuit Diagram Guide, VOLVO Screed Wiring Schematics, VOLVO VB40 Electrical Troubleshooting Manual, VOLVO VB40 Hydraulic Troubleshooting Guide, VOLVO Paver Screed Wiring Diagram Manual, VOLVO VB40 Electrical System Documentation, VOLVO VB40 Hydraulic System Manual, VOLVO Screed Connector Layout Guide, VOLVO VB40 OEM Electrical Schematic Manual, VOLVO Asphalt Paver Hydraulic Diagrams, VOLVO VB40 Electrical Components Guide, VOLVO VB40 Hydraulic Flow Diagram Manual, VOLVO Construction Equipment Wiring Manual, VOLVO VB40 Technical Schematic Guide, VOLVO Screed Electrical and Hydraulic Service Manual, VOLVO VB40 Electrical & Hydraulic Schematic Manual USA, VOLVO VB40 Wiring Diagram Manual Canada, VOLVO VB40 Hydraulic Schematic Guide UK, VOLVO VB40 Electrical Circuit Manual Australia, VOLVO VB40 Schaltplan Germany, VOLVO VB40 Schéma Électrique et Hydraulique France, VOLVO VB40 Diagrama Eléctrico e Hidráulico Spain, VOLVO VB40 Electrical Manual India, VOLVO VB40 Hydraulic Diagram Manual South Africa, VOLVO VB40 Schematic Manual New Zealand, VOLVO Road Construction Equipment Wiring Diagrams, VOLVO Asphalt Paving Equipment Hydraulic Schematics, VOLVO Heavy Equipment

Electrical Manual PDF, VOLVO Screed Hydraulic Circuit Documentation, VOLVO VB40 Complete Electrical and Hydraulic Reference Manual.

- VOLVO VB40 Electrical & Hydraulic Schematic PDF Manual
- VOLVO VB40 Wiring Diagram Manual PDF
- VOLVO VB40 Hydraulic Circuit Diagram Guide
- VOLVO VB40 Electrical Wiring Schematic Handbook
- VOLVO VB40 Hydraulic System Diagram PDF
- VOLVO VB40 Electrical Troubleshooting Manual
- VOLVO VB40 Hydraulic Flow Diagram Manual
- VOLVO VB40 OEM Electrical Schematic PDF
- VOLVO VB40 Factory Hydraulic Circuit Diagram
- VOLVO VB40 Wiring & Hydraulic Service Manual
- VOLVO VB40 Technical Circuit Diagram PDF
- VOLVO VB40 Equipment Electrical Diagram Manual
- VOLVO VB40 Hydraulic Repair Schematic Guide
- VOLVO VB40 Service Wiring Diagram Handbook
- VOLVO VB40 Complete Electrical & Hydraulic Manual PDF

United States

- VOLVO VB40 Electrical & Hydraulic Schematic Manual USA

- VOLVO VB40 Wiring Diagram Manual United States
- VOLVO VB40 Hydraulic Circuit Guide America

United Kingdom

- VOLVO VB40 Electrical Schematic Manual UK
- VOLVO VB40 Hydraulic Diagram Handbook England
- VOLVO VB40 Wiring Guide Britain

Canada

- VOLVO VB40 Electrical & Hydraulic Manual Canada
- VOLVO VB40 Schematic Guide Canadian Edition

Australia

- VOLVO VB40 Wiring Diagram Manual Australia
- VOLVO VB40 Hydraulic Schematic Guide Australia

New Zealand

- VOLVO VB40 Electrical Manual New Zealand
- VOLVO VB40 Hydraulic Handbook NZ

Germany

- VOLVO VB40 Elektrischer Schaltplan Deutschland
- VOLVO VB40 Hydraulikschaltplan Handbuch Germany

France

- VOLVO VB40 Schéma Électrique France
- VOLVO VB40 Schéma Hydraulique France

Spain

- VOLVO VB40 Diagrama Eléctrico España
- VOLVO VB40 Esquema Hidráulico España

Italy

- VOLVO VB40 Schema Elettrico Italia
- VOLVO VB40 Schema Idraulico Italia

Netherlands

- VOLVO VB40 Elektrisch Schema Nederland
- VOLVO VB40 Hydraulisch Schema Nederland

Sweden

- VOLVO VB40 Elektriskt Kopplingsschema Sverige
- VOLVO VB40 Hydrauliskt Schema Sverige

Norway

- VOLVO VB40 Elektrisk Koblingsskjema Norge
- VOLVO VB40 Hydraulisk Skjema Norge

Finland

- VOLVO VB40 Sähkökaavio Suomi

- VOLVO VB40 Hydrauliikkakaavio Suomi

Denmark

- VOLVO VB40 Elektrisk Diagram Danmark
- VOLVO VB40 Hydraulisk Skema Danmark

UAE

- VOLVO VB40 Electrical & Hydraulic Manual UAE
- VOLVO VB40 Wiring Diagram Dubai

Saudi Arabia

- VOLVO VB40 Electrical Schematic Manual KSA
- VOLVO VB40 Hydraulic Circuit Guide Saudi Arabia

South Africa

- VOLVO VB40 Electrical & Hydraulic Manual South Africa
- VOLVO VB40 Schematic Handbook Africa

Brazil

- VOLVO VB40 Diagrama Elétrico Brasil
- VOLVO VB40 Esquema Hidráulico Brasil

Mexico

- VOLVO VB40 Diagrama Eléctrico México
- VOLVO VB40 Esquema Hidráulico México

Singapore

- VOLVO VB40 Electrical Schematic Manual Singapore
- VOLVO VB40 Hydraulic Diagram Guide Singapore

Malaysia

- VOLVO VB40 Electrical & Hydraulic Manual Malaysia
- VOLVO VB40 Wiring Guide Malaysia

Philippines

- VOLVO VB40 Electrical Manual Philippines
- VOLVO VB40 Hydraulic Handbook Philippines

Indonesia

- VOLVO VB40 Diagram Kelistrikan Indonesia
- VOLVO VB40 Diagram Hidrolik Indonesia

Download Now